PLANNING & DEVELOPMENT
Building Division

850 S. Madera Avenue
KERMAN, CA 93630

Phone: (559) 846-6121
Fax: (559) 846-9348
www.cityofkerman.net

STANDARD PATIO PLAN

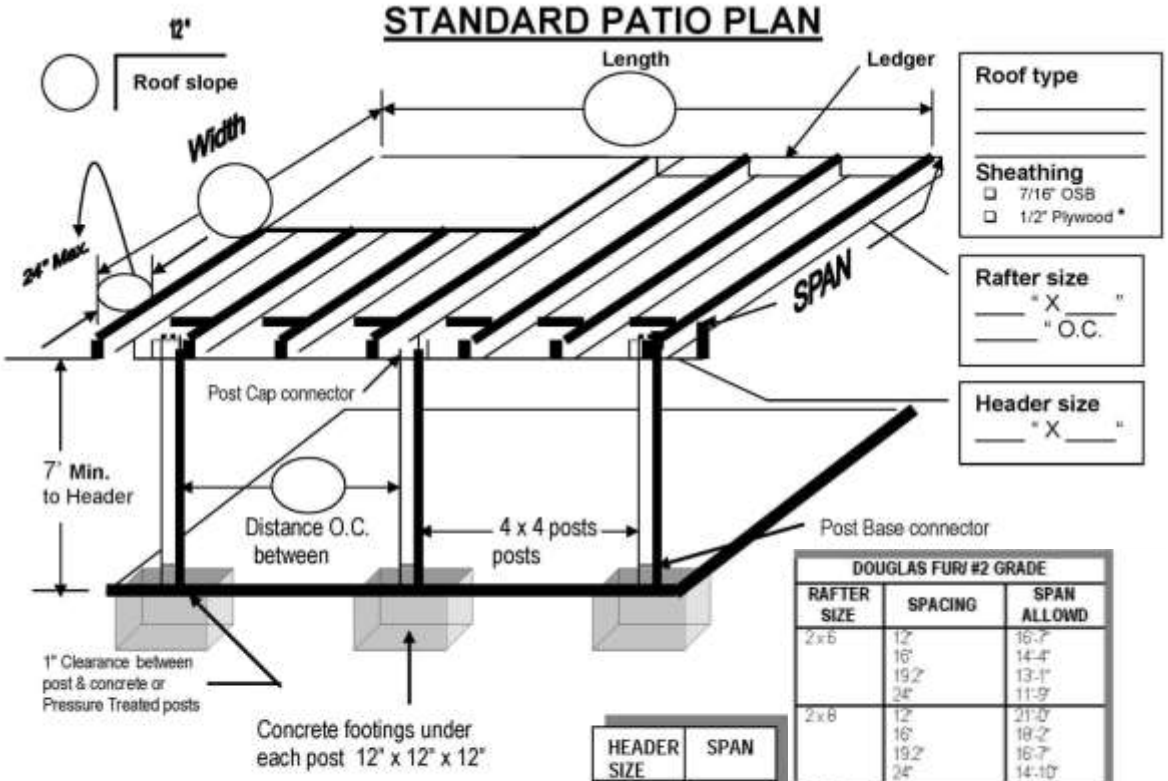

Roof type
_____
_____

Sheathing
- ☐ 7/16" OSB
- ☐ 1/2" Plywood *

Rafter size
____ " X ____ "
____ " O.C.

Header size
____ " X ____ "

HEADER SIZE	SPAN
4 X 6	6 FT.
4 X 8	8 FT.
4 X 10	10 FT.
4 X 12	12 FT.

DOUGLAS FUR/ #2 GRADE		
RAFTER SIZE	SPACING	SPAN ALLOWD
2 x 6	12" 16" 19.2" 24"	16'-7" 14'-4" 13'-1" 11'-9"
2 x 8	12" 16" 19.2" 24"	21'-0" 18'-2" 16'-7" 14'-10"
2 x 10	12" 16" 19.2" 24"	25'-8" 22'-3" 20'3" 18'-2"
2 x 12	12" 16" 19.2" 24"	N/A 25'-9" 23'-6" 21'-0"

Approved methods of attachments

Check one

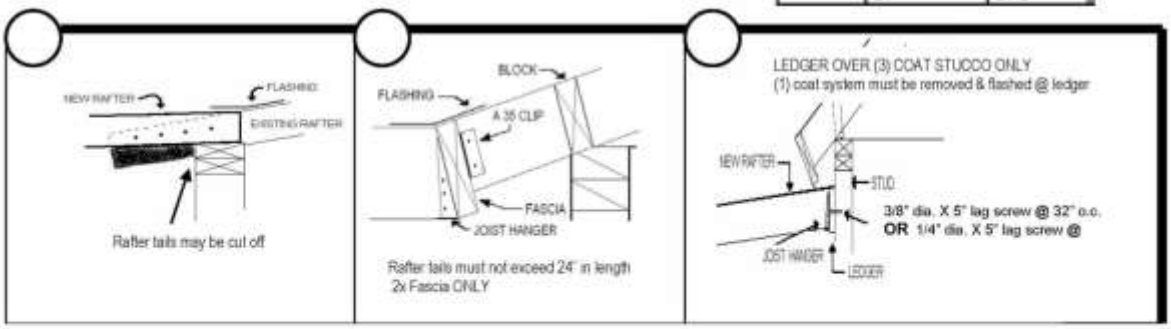

This design not approved to be enclosed.
* Exposed plywood shall be CCX or better.